Research Article | Vol. 34, No. 15 / 27 Jul 2026 / Optics Express 28528

Optics EXPRESS

Generalized CHSH nonlocality criteria for continuous variable bipartite Gaussian states: testing in a double-cavity optomechanical device

Souvik Agasti[1,2,*]

[1] IMOMEC division, IMEC, Wetenschapspark 1, 3590 Diepenbeek, Belgium
[2] Institute for Materials Research (IMO), Hasselt University, Wetenschapspark 1, 3590 Diepenbeek, Belgium
[*] souvik.agasti@uhasselt.be

Abstract: We derive a general condition for nonlocality using the Banaszek-Wódkiewicz phase-space Wigner representation of Bell's function in continuous-variable Gaussian states, showing rigorously that while entanglement is necessary, it is not sufficient for nonlocality, whereas nonlocality always implies entanglement. Furthermore, to demonstrate the applicability of the framework, we analyze the two-mode squeezed output generated by a double-cavity optomechanical system coupled to a common mechanical resonator—an experimentally accessible hybrid electro/optomechanical interface. We show that maximal entanglement does not necessarily lead to Bell violation, whereas nonlocality may arise in states with lower entanglement, highlighting the crucial role of mixedness. The developed formalism is universally applicable to all bipartite Gaussian states and provides a general tool for investigating foundational and operational aspects of nonlocality in continuous-variable quantum platforms.

© 2026 Optica Publishing Group under the terms of the Optica Open Access Publishing Agreement

1. Introduction

Gaussian states have drawn attention for the generation and application of continuous variable (CV) entangled states [1–5]. A popular example of such bipartite Gaussian CV state is the two-mode squeezed vacuum (TMSV) state which show entanglement between two parties; had remained in the intensive interest of the community due to its application in quantum communication [6–8], and high-fidelity quantum state transfer [9,10], quantum memory systems [11], sensing and manipulation of quantum states [12,13], and even in gravitational wave metrology [14–16]. The impact of entanglement reflects a profound feature of quantum measurements on bipartite quantum systems, which is non-local realism, which solved the Einstein-Podolsky-Rosen (EPR) measurement paradox [17,18]. The test of a hidden variable that puts a limitation on local realism has been determined by Bell's inequality [19–21]. Quantum nonlocality has been tested by exploring several types of Bell's inequalities, which are experimentally realizable through homodyne measurements [20,21]. Such a type of inequality was first formulated by Clauser, Horne, Shimony, and Holt (CHSH) [22,23], and further, Banaszek-Wódkiewicz had expressed it in phase space using Wigner quasiprobability functions [24,25], which we use in this article.

The entanglement criteria of a bipartite system are dependent on separability limits, which exists if and only if the bipartite quantum state (ρ) can be expressed in the form of $\rho = \sum_j p^j \rho_I^j \otimes \rho_S^j$ where ρ_I^j, ρ_S^j are the normalized states of idler (I) and signal (S) modes, respectively, and the probability $p^j \geq 0$ satisfies $\sum_j p^j = 1$. The separability limit was first proposed by Peres [26] and afterwards by Horodecki for higher-dimensional cases [27]. For CV Gaussian states, the idea has furthermore been established and formulated from their two party covarience matrix by Simon [28] and Duan et. al. [29]. Even though many theoretical conditions have been prescribed to witness entanglement and eventually quantify it, there is no direct analytical expression

#598825 https://doi.org/10.1364/OE.598825
Journal © 2026 Received 13 Mar 2026; revised 19 Jun 2026; accepted 9 Jul 2026; published 23 Jul 2026

Optics EXPRESS

available for the quantification of non-locality, especially for CV bipartite systems, which is still a gray area to explore. The maximization of Bell's function has usually been numerically determined so far, while analyzing homodyne measurements, as the quantification of non-locality [19,30]. Therefore, it becomes essential to provide an analytical expression that formulates Bell's inequality, especially for Gaussian states, which can often be used in quantum optical experiments. In this direction, a lot of effort had been invested only on TMSV to analyze both entanglement and nonlocality [31–33], but it is a special type of pure Gaussian state, which does not provide a generalized picture, and therefore, a universal formulation is required which can be applicable to both pure and mixed states.

Although entanglement and nonlocality are different phenomena, the latter has been vaguely considered as evidence of entanglement [34]. However, it has been realized that entanglement can be witnessed even though systems are locally realizable [30,35,36]. In contrast, strong quantum nonlocality has also been realized without entanglement as well [37], and as a consequence, a limited class of states nonlocally realizable can witness quantum entanglement [38]. In fact, all classically correlated and non-product states admit violation of Bell's inequality [39–41]. However, Barrett has proven that entangled mixed states do not always violate a Bell inequality [42]. Therefore, it remains an open question and becomes necessary to see how to determine the largest set of entangled Gaussian states for which Bell's inequalities are violated, and what is the gap with the set of all entangled states, which we answer here.

Furthermore, we apply these concepts to the analysis of two-mode squeezing (TMS) generated at the output of a double-cavity optomechanical system. It has been proposed that opto/electro-mechanical devices can serve as highly efficient, state-of-the-art sources of TMS [5,10,43], and also, recently, the Bell test has been performed between two entangled silicon optomechanical oscillators [44]. The system consists of two optical cavities coupled to a common mechanical oscillator, a configuration that is of considerable interest for back-action-evading measurements [45], including applications in gravitational-wave detection [16]. The TMS output can be generated by driving one of the cavities with a blue-detuned pump and the other with a red-detuned pump [10]. This hybrid scheme has been proposed as a reversible quantum interface between optical and microwave fields. The correlations of the output fields are typically analyzed for selected spectral components extracted via filtering, which is particularly relevant for high-fidelity quantum state transfer. While other proposals for testing Bell inequalities in optomechanical systems have recently been put forward [46,47], they rely on significantly different experimental configurations. In contrast, the setup discussed here—owing to the sequential nature of the pulsing scheme—does not face the same loopholes that arise in those alternative approaches. In this work, we investigate the nonlocal behavior of bipartite Gaussian CV states in such a system and examine how it evolves with increasing entanglement, exploring whether a direct relationship can be established between these two phenomena. We also analyze how the regions of nonlocality are modified when non-identical filters are employed. In this way, we demonstrate how the theoretical framework developed here can be applied to micromechanical resonators and superconducting quantum circuits, with potential applications to CV teleportation between optical idler and microwave signals.

In this article, starting from the correlations between two parties in CV Gaussian states and employing the Wigner phase-space formalism, we formulate a maximized Bell function as a quantitative measure of nonlocality. We then prove that, although entanglement is a necessary condition for nonlocality, it is not sufficient; conversely, nonlocality implies entanglement for bipartite Gaussian states. Finally, applying this framework to the TMS output of a double-cavity optomechanical system, we analyze the violation of Bell's inequality and determine the boundary conditions defining the nonlocality criterion, comparing these results with the corresponding entanglement properties.

Optics EXPRESS

2. Formulation of generalized CHSH inequality for bipartite Gaussian system

2.1. Correlation matrix in standard form

The correlation between two parties in Gaussian states can be completely determined by a 4×4 real symmetric correlation matrix:

$$V' = \begin{bmatrix} V'_I & V'_{IS} \\ {V'_{IS}}^T & V'_S \end{bmatrix}, \tag{1}$$

where $V'_I(V_S)$ and V'_{IS} are the 2×2 real matrices, represent for the systems $I(S)$ and their cross-correlation, respectively. While studying their separability property, it remained convenient to transform the correlation matrix to some standard form using a local linear unitary Bogoliubov operator (LLUBO) $U_l = U_I \otimes U_S$ [28,29], and we will use the same standard form to formulate non-locality as well. The LLUBO operation works with a combination of squeezing transformation and rotation [48], which transforms the correlation matrix of Eq. (1) to a standard form as

$$V = \begin{bmatrix} n & & c_1 & \\ & n & & c_2 \\ c_1 & & m & \\ & c_2 & & m \end{bmatrix}, \ (n, m \geq \frac{1}{2}) \tag{2}$$

The operation goes with diagonalizing V'_I and V'_S by the first LLUBO operation using local orthogonal $U_{I,S}$, and then squeezing locally to obtain $V_I = nI_2$ and $V_S = mI_2$ where $I_2 = \text{diag}[1, 1]$. After these steps of operation, the transformed version of V'_{IS} is furthermore diagonalized by another LLUBO with a suitable choice of orthogonal $U_{I,S}$, which does not influence V_I and V_S. The newly generated parameters in Eq. (2) are related to the inverients as $\det(V'_I) = n^2, \det(V'_S) = m^2, \det(V'_{IS}) = c_1 c_2$ and $\det(V') = (nm - c_1^2)(nm - c_2^2)$. For a bipartite Gaussian state, the mixedness of the state is quantified by $\text{Tr}(\rho^2) = \frac{1}{4\sqrt{\det(V)}}$, which leads to

$$4(nm - c_1^2)(nm - c_2^2) \geq \frac{1}{4} \tag{3}$$

The inequality furthermore gives: $nm - |c_1 c_2| \geq \frac{1}{4}$.

2.2. Quantum non-locality

The non-locality is justified by the violation of Bell's inequality, which can be quantified by the maximum value of the Bell's function ($|B_{max}|$). Banaszek-Wódkiewicz expressed the Bell's function in terms of Wigner functions as [19,24,25]

$$B = \pi^2 \left[W(u_{00}) + W(u_{I0}) + W(u_{0S}) - W(u_{IS}) \right] \tag{4}$$

where

$$W(u_{IS}) = \frac{1}{4\pi^2 \sqrt{\det(V)}} \exp\left[-\frac{1}{2} {u_{IS}}^T V^{-1} u_{IS} \right] \tag{5}$$

represents the Wigner function for the vector $u_{IS} = [Q_I, P_I, Q_S, P_S]^T$ in phase space ($[Q_0, P_0] = [0, 0]$). The sufficient condition for non-local realization of a quantum mechanical bipartite state is the violation of Bell's inequality: $|B_{max}| \leq 2$, and a larger $|B_{max}|$ indicates stronger non-locality.

Optics EXPRESS

The Bell function defined in Eq. (4) will be maximized when the following function at the exponent will be maximized

$$\frac{1}{2}u_{IS}{}^{T}V^{-1}u_{IS} = \frac{1}{2}\big[m\alpha_I^2 + n\alpha_S^2 - 2c\alpha_I\alpha_S(\cos\phi\cos\theta_I\cos\theta_S + \sin\phi\sin\theta_I\sin\theta_S)\big] \tag{6}$$

where $\alpha_I^2 = (\tilde{Q}_I{}^2 + \tilde{P}_I{}^2), \alpha_S^2 = (\tilde{Q}_S{}^2 + \tilde{P}_S{}^2), \tilde{Q}_I = \alpha_I\cos\theta_I, \tilde{P}_I = \alpha_I\sin\theta_I, \tilde{Q}_S = \alpha_S\cos\theta_S, \tilde{P}_S = \alpha_S\sin\theta_S$, where $\tilde{Q}_I = \frac{Q_I}{\sqrt{mn-c_1^2}}, \tilde{P}_I = \frac{P_I}{\sqrt{mn-c_2^2}}, \tilde{Q}_S = \frac{Q_S}{\sqrt{mn-c_1^2}}, \tilde{P}_S = \frac{P_S}{\sqrt{mn-c_2^2}}$, and $c^2 = c_1^2 + c_2^2, c_1 = c\cos\phi, c_2 = c\sin\phi$, and therefore, $\alpha_I, \alpha_S, c \geq 0$ and $1 \geq (\cos\phi\cos\theta_I\cos\theta_S + \sin\phi\sin\theta_I\sin\theta_S) \geq -1$. As ϕ is a fixed angle, for a given correlation matrix, we have the liberty to vary θ_I and θ_S to maximize the Bell function given in Eq. (4). We therefore find out the intermediatory maximized Bell function as

$$B_m = \frac{1}{4\sqrt{\det(V)}}\Big[1 + \exp\left(-\frac{1}{2}m\alpha_I^2\right) + \exp\left(-\frac{1}{2}n\alpha_S^2\right) - \exp\left(-\frac{1}{2}\left[m\alpha_I^2 + n\alpha_S^2 + 2\tilde{c}\alpha_I\alpha_S\right]\right)\Big], \tag{7}$$

where $\tilde{c} = \max[|c_1|, |c_2|]$. It can be shown that $B \leq B_m$ straightforwardly under any circumstances. Extreme points of B_m will be determined for $\alpha_S = \sqrt{\frac{m}{n}}\alpha_I$, and such combinations have already been in use before by Banaszek-Wódkiewicz for TMSV states [24,25]. In fact, B_m shows symmetry $B(\alpha_I, \alpha_S) = B(\sqrt{\frac{n}{m}}\alpha_S, \sqrt{\frac{m}{n}}\alpha_I)$. Expressing everything in terms of α_I as $B_m = \frac{M}{4\sqrt{\det(V)}}$ where $M = \left[1 + 2A^{-m} - A^{-(2m+2\tilde{c}\sqrt{\frac{m}{n}})}\right]$ where $A = \exp\left(\frac{1}{2}\alpha_I^2\right)$, therefore $0 \leq \alpha_I \leq \infty \rightarrow 1 \leq A \leq \infty$. $\partial_A M = 0$ gives

$$A = \left(\frac{m}{m + \tilde{c}\sqrt{m/n}}\right)^{-\frac{1}{m+2\tilde{c}\sqrt{m/n}}} \tag{8}$$

which gives

$$B_{max} = \frac{1/4}{\sqrt{\det(V)}}\left[1 + \left(\frac{\sqrt{nm}}{\sqrt{nm} + \tilde{c}}\right)^{\frac{\sqrt{nm}}{\sqrt{nm}+2\tilde{c}}}\left(\frac{\sqrt{nm} + 2\tilde{c}}{\sqrt{nm} + \tilde{c}}\right)\right] \tag{9}$$

One can also check $\partial_A^2 M < 0$, which ensures maxima. The thermal dissipation of TMSV in the results of [19,36] can be recovered from the expression of Eq. (9), with a suitable choice of matrix elements of Eq. (2). For example, in case of TMSV, by fixing $m = n = \cosh 2r, \tilde{c} = \sinh 2r$, where r is the squeezing factor, one can see that when $r \rightarrow \infty, B_{max} \rightarrow 1 + \frac{3}{2^{4/3}} = 2.19055$; the state becomes maximally nonlocal [24]. However, in the case of the generalized formulation given in Eq. (9), the non-locality condition: $|B_{max}| \geq 2$ leads to

$$\frac{1}{16}\left[1 + \left(\frac{1}{1+x}\right)^{\frac{1}{1+2x}}\left(\frac{1+2x}{1+x}\right)\right]^2 \geq 4(nm - c_1^2)(nm - c_2^2) \tag{10}$$

where $x = \tilde{c}/\sqrt{nm} \leq 1$ which can easily be justified from the Schrödinger-Robertson uncertainity principle [49].

Note that we accept this form of the violation of the Bell inequality because the state is described by a positive Wigner function [24,25]. The local operations during LLUBO do not change the maximized Bell function and the violation of local realism, given in Eq. (10).

Optics EXPRESS

2.3. Comparing entanglement and nonlocality

Simon's sufficient criteria for entanglement is [28]

$$4(nm - c_1^2)(nm - c_2^2) \leq (n^2 + m^2) + 2|c_1 c_2| - 1/4 \tag{11}$$

The condition furthermore quantifies entanglement in terms of logarithmic negativity. However, we intend to compare here the sufficient conditions of entanglement and nonlocality. The LHS of the Eq. (10) furthermore, can be limited to

$$\begin{aligned} \frac{1}{16}\left[1 + \left(\frac{1}{1+x}\right)^{\frac{1}{1+2x}}\left(\frac{1+2x}{1+x}\right)\right]^2 &= \frac{1}{4}(1+x^2) - O[x^3] \\ &\leq \frac{1}{4}(1+x^2) \ \text{ in the range } 0 \leq x \leq 1 \end{aligned} \tag{12}$$

As $(n^2 + m^2) \geq 2nm$, therefore, if we can prove

$$nm(2 + 2xx' - \frac{1}{4nm}) \geq \frac{1}{4}(1+x^2), \text{ where } x' = \frac{\min[|c_1|, |c_2|]}{\sqrt{nm}}, \tag{13}$$

it will be ensured that non-locality is a sufficient criterion for all Gaussian states to be declared as entangled. However, this does *not* ensure that if the states are entangled, they are non-locally relizable.

Proof:

From the realization of the mixedness of the state given in Eq. (3), we have

$$\begin{aligned} 0 \leq x'^2 &\leq 1 - \frac{1}{16(nm)^2(1-x^2)} \\ \frac{1}{4(nm)} &\leq \sqrt{(1-x^2)} \end{aligned} \tag{14}$$

Applying it on LHS-RHS of the Eq. (13), we have

$$\begin{aligned} (2 + 2xx' - \frac{1}{4nm}) - (\frac{1}{4nm} + \frac{x^2}{4nm}) &\geq 2 - \frac{1}{4nm}(2+x^2) \\ \geq 2 - (2+x^2)\sqrt{(1-x^2)} &\geq 0 \text{ in the range } 0 \leq x \leq 1 \end{aligned} \tag{15}$$

which proves the inequality in Eq. (13). The result justifies that the realization of non-locality is sufficient to witness entanglement in the case of bipartite Gaussian states, but the reverse may not be true. The phenomenon has also been seen in [30] before, where the nonlocality remains limited within a small region of entanglement, justifying that entanglement is necessary but not sufficient to realize non-locality.

3. Application on two-mode squeezed output generated in double-cavity optomechanics

3.1. Model

We now apply the developed theoretical framework to the TMS output generated by an optomechanical system. In particular, we evaluate the violation of the CHSH Bell inequality for selected spectral components of the emitted output fields, which are expected to exhibit entanglement. To this end, we consider a double-cavity optomechanical setup in which two optical cavities, with resonant frequencies $\omega_\pm$, are coupled to a common mechanical oscillator of frequency ω_m

Optics EXPRESS

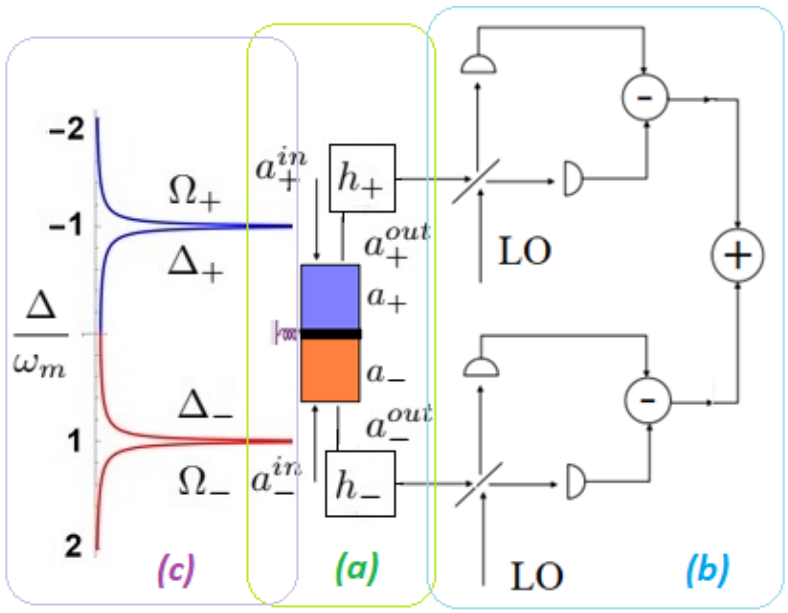

Fig. 1. Block diagram of (a) double cavity optomechanical system and the filters at output, (b) homo/heterodyne measurement of the bipartite quantum correlation (LO is the local oscillator), and (c) illustration of the ranges of frequencies at which the red and blue detuned cavities and their filter frequencies operate on.

(see Fig. 1). Such a configuration was theoretically proposed in [10] and can be experimentally realized, for instance, by integrating an optical cavity into a microwave superconducting circuit platform [50].

In this scheme, one cavity (denoted '+') is driven by a blue-detuned laser, while the other ('−') is driven by a red-detuned laser, with driving frequencies $\omega_\pm^L = \omega_\pm - \Delta_\pm$, where $\Delta_\pm$ denote the respective detunings. The generation of hybrid TMS Bogoliubov modes requires opposite detunings satisfying the locking condition $\Delta_- = -\Delta_+ \approx \omega_m$. In addition, to suppress single-mode squeezing processes, the resolved-sideband regime $\omega_m \gg \kappa_\pm$ must be fulfilled, where $\kappa_\pm$ are the cavity damping rates.

Moving to the rotating frame of the driving lasers and neglecting non-resonant terms, the effective optomechanical Hamiltonian (H_{OM}) can be approximated as

$$\begin{aligned} H_{OM} &= \Delta_+ a_+^\dagger a_+ + \Delta_- a_-^\dagger a_- + \omega_m b^\dagger b \\ &\quad + G_+(a_+^\dagger b^\dagger + a_+ b) + G_-(a_- b^\dagger + a_-^\dagger b) \end{aligned} \tag{16a}$$

$$H_{drive} = i\left(a_+^\dagger E_+ e^{-i\omega_+^L t} + a_-^\dagger E_- e^{-i\omega_-^L t} - \text{h.c.}\right), \tag{16b}$$

where $a_\pm^\dagger(a_\pm)$ and $b^\dagger(b)$ are the creation (annihilation) operators of the corresponding cavity modes and the mechanical oscillator, respectively. H_{drive} describes the external driving fields with amplitudes $E_\pm$. The effective linearized optomechanical couplings are given by $G_\pm = g_\pm \alpha_\pm$, where $\alpha_\pm = -iE_\pm/(\kappa_\pm + i\Delta_\pm)$ represent the intracavity field amplitudes, and $g_\pm$ are the single photon coupling rates. Efficient TMS generation requires operation in the high-cooperativity regime, $4G_\pm^2/(\kappa_\pm \gamma_m) \gg 1$, where γ_m is the mechanical damping rate. This condition necessitates strong external driving of the cavities.

Optics EXPRESS

The system dynamics are obtained from the corresponding quantum Langevin equations [51]:

$$\dot{a}_+ = -(\kappa_+ - i\Delta_+)a_+ - iG_+ b^\dagger + \sqrt{2\kappa_+}a_+^{in} \tag{17a}$$

$$\dot{a}_- = -(\kappa_- + i\Delta_-)a_- - iG_- b + \sqrt{2\kappa_-}a_-^{in} \tag{17b}$$

$$\dot{b} = -(\gamma_m + i\omega_m)b - i(G_+ a_+^\dagger + G_-^* a_-) + \sqrt{2\gamma_m}b^{in} \tag{17c}$$

where b^{in} and $a_\pm^{in}$ are the input fields to the mechanics and the respective cavities. Following [10], we assume symmetric cavity damping rates, $\kappa_- = \kappa_+$. Stability of the steady state is ensured by the Routh–Hurwitz criterion, which in this configuration imposes the condition $G_+ \leq G_-$. According to input–output theory, the output field operators are related to the intracavity and input operators via $a_\pm^{out} = \sqrt{2\kappa_\pm}a_\pm - a_\pm^{in}$, where $a_\pm^{out}$ are the output fields of the respective cavities.

3.2. Output spectral modes

The measured specific cavity output spectral modes are defined for the bosonic annihilation operators as

$$f_\pm^{out}(t) = \int_{-\infty}^{t} h_\pm(t-t')a_\pm^{out}(t')\mathrm{d}t' \tag{18}$$

$h_\pm(t)$ are causal filter functions defining the output modes of corresponding cavities, follows standard normalization condition $\int |h_\pm(t)|^2 \mathrm{d}t = 1$. Earlier, it was noticed that the deviation from the identical nature of the filter can effectively destroy both entanglement and nonlocality between two measurements [30,36], which we also test in this case. Following [10], we choose an exponentially decaying function to pick up the specific spectral component from the output. For a fixed central frequency $\Omega_\pm$ and bandwidth $1/\tau$ (remains equal for the two modes), the filter function is defined as

$$h_\pm(t) = \sqrt{2/\tau}\,\Theta(t)e^{-(1/\tau + i\Omega_\pm)t}, \tag{19}$$

where $\Theta(t)$ is the Heaviside step function. Since the cavity modes are expected to be entangled around $\mp\omega_m$, and followed by their outputs, we fix the central frequencies around $\Omega_\pm \approx \mp\omega_m$, while testing squeezing and nonlocality of the output signals. The elements of the associated covariance matrix in the output of the system are

$$V_{ij}(\infty) = \frac{1}{2}\lim_{t\to\infty}\langle\{u_i^{f,out}, u_i^{f,out}\}\rangle \tag{20}$$

where $\mathbf{u}^{f,out} = [X_+^{f,out}, Y_+^{f,out}, X_-^{f,out}, Y_-^{f,out}]$ where $X_\pm^{f,out} = (f_\pm^{out} + f_\pm^{out\dagger})/\sqrt{2}$, $Y_\pm^{f,out} = -i(f_\pm^{out} - f_\pm^{out\dagger})/\sqrt{2}$ are the amplitude and phase quadratures of respective cavities.

3.3. Results

Within our approach, the system is described by linearized quantum fluctuations around the semiclassical steady state and is driven by Markovian Gaussian noise sources. Consequently, the stationary output fields form a zero-mean bipartite Gaussian state [10]. This allows both entanglement and nonlocality to be fully characterized in terms of the second-order correlations encoded in the covariance matrix.

In Fig. 2, we quantify nonlocality through the maximized Bell function introduced in Eq. (9) and compare it with entanglement evaluated via Simon's criterion [28], expressed in terms of the logarithmic negativity, ($E_N = \max[0, -\ln 2\eta]$, where $\eta = \sqrt{\frac{\Sigma(V)+\sqrt{\Sigma(V)^2-4\det(V)}}{2}}$ and $\Sigma(V) = n^2 + m^2 + 2|c_1c_2|$). Although the considered setup has been proposed as an efficient source of entangled TMS states, violation of the CHSH inequality emerges only in the large-cooperativity regime, $C_- = 4G_-^2/(\gamma_m\kappa_-) \gg 1$, whereas entanglement persists over a significantly

Optics EXPRESS

broader parameter range. In particular, as shown in Fig. 2(b), as we intend to generate TMS Bogoliubov output mods, entanglement is present throughout almost the entire explored region, while nonlocality (Fig. 2(a)) is confined to a comparatively narrow domain. This behavior is consistent with the general result proven in Eq. (13): *for bipartite CV Gaussian states, entanglement is necessary but not sufficient for nonlocality*. Moreover, due to the Gaussian character of the states and the CHSH class of Bell measurements considered, the Bell parameter does not exceed approximately 2.19, even though the logarithmic negativity can grow without bound. Interestingly, while increasing the ratio G_+/G_- enhances the degree of TMS and entanglement, the Bell measurement exhibits a non-monotonic, bell-shaped dependence and eventually decreases. In particular, maximally entangled states do not necessarily violate locality constraints, whereas Bell nonlocality may arise for states with a lower degree of entanglement. This feature can be understood by examining the mixedness of the states, which plays a crucial role in limiting Bell violations. Besides, when non-identical spectral filtering is applied ($\Omega_+ \neq -\Omega_-$), as shown in Fig. 2(c), the Bell violation is further reduced due to the partial disruption of coherent correlations between the output modes, in agreement with previous observations [30]. Nevertheless, it remains unchanged that the entanglement region remains substantially larger than the corresponding nonlocality region (Fig. 2(d)).

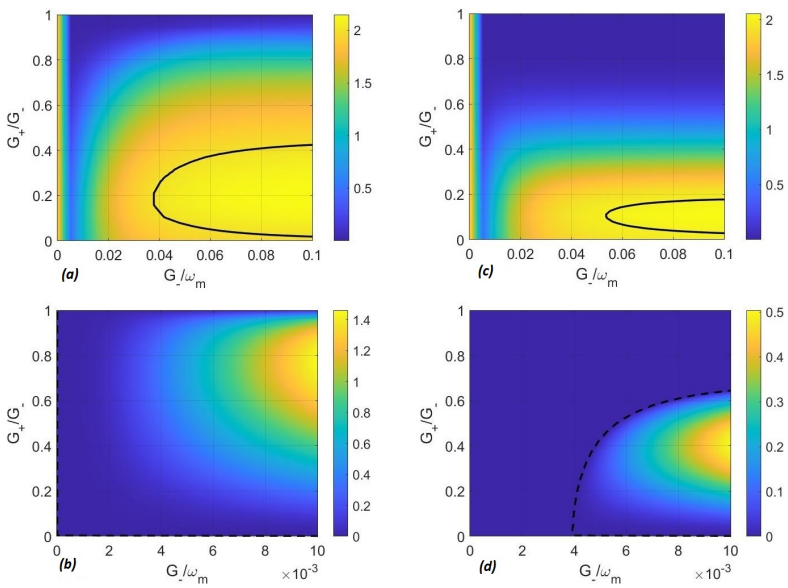

Fig. 2. (a) Nonlocality and (b) entanglement between the filtered output modes for identical filters ($\Omega_+ = -\omega_m$, $\Omega_- = \omega_m$), and (c) nonlocality and (d) entanglement corresponds to non-identical filters ($\Omega_+ = -1.0001\,\omega_m$, $\Omega_- = \omega_m$). In both cases, the parameters are fixed to $\epsilon = \tau\omega_m = 5000$ and $\kappa_\pm = 0.02\,\omega_m$. The mechanical resonator parameters are $\omega_m/2\pi = 10\,\text{MHz}$ and quality factor $Q \equiv \omega_m/\gamma_m = 1.5 \times 10^5$. The environmental temperature is $T = 50\,\text{mK}$, corresponding to an effective thermal phonon occupation of approximately 100. Since the cavity resonance frequencies lie in the GHz regime ($\omega_\pm/2\pi \approx 10\,\text{GHz}$, or more), the thermal occupation of their respective reservoirs can be safely neglected. The input laser powers are varied to tune the effective optomechanical coupling strengths $G_\pm$. This parameter set follows the proposal of [10] and is consistent with the experimental regime reported in [50]. In panel (a), the solid black line ($B_{\max} = 2$) marks the boundary between local and nonlocal regions. In panel (b), the dashed black line indicates the separability threshold between entangled and separable states.

Optics EXPRESS

Motivated by the sensitivity of quantum correlations to frequency mismatch, we further investigate how the boundary of nonlocality depends on the filter linewidth. As illustrated in Fig. 3, frequency mismatch generally reduces the nonlocality region; however, the dependence on the filter bandwidth exhibits opposite trends depending on the filtering configuration. For identical filtering with perfectly matched frequencies ($\Omega_+ = -\Omega_- = -\omega_m$), narrowing the filter linewidth ($1/\tau$) enlarges the nonlocality region (Fig. 3(a)). By contrast, for mismatched filtering ($\Omega_+ \neq -\Omega_- = -\omega_m$), reducing the linewidth suppresses the Bell violation (Fig. 3(b)). This behavior mirrors earlier findings for coherent transfer of TMSV states [30]. In the case of identical filtering, a narrower bandwidth reduces the probability of frequency mismatch and thus enhances nonlocal correlations. Conversely, under mismatched conditions, a broader filter increases the likelihood of effective frequency overlap, thereby facilitating coherent transfer and strengthening nonlocality. These trends are also consistent with the fact that nonlocality closely follows entanglement, which itself degrades more rapidly with increasing frequency mismatch for larger τ, as reported in [10].

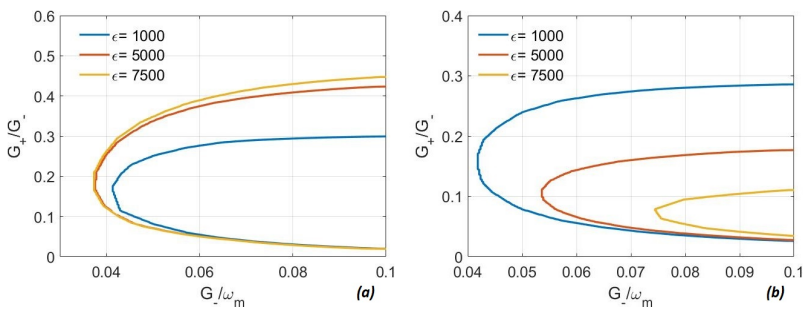

Fig. 3. The boundary of nonlocality, where $|B|_{max} = 2$ when the filters are (a) identical (i.e. $\Omega_+ = -\omega_m$ and $\Omega_- = \omega_m$) and (b) not-identical ($\Omega_+ = -1.0001\omega_m$. The nonlocality can be observed in the region that belongs to the right side of the boundary, as it is seen in Fig. 2(b). All other parameters remain the same with Fig. 2

4. Summary

We have formulated maximally optimized Bell's function of bipartite CV Gaussian states in terms of correlation matrix elements, using Wigner phase-space formalism. The result eventually offers a boundary condition for local realism, which is a foundational limit in quantum mechanics. Furthermore, we have proven that all non-locally realized CV bipartite Gaussian states are entangled. Our analysis, moreover, builds up a connection and highlights the gap between entanglement and nonlocality in the case of Gaussian states. The analytical expression will be useful to determine nonlocality in any bipartite system and the possible gap with entanglement. For example, the maximized Bell's functions in [19,30,35,36] can be recovered using the formulation of nonlocality, and therefore, one does not need to be dependent on numerical techniques to quantify nonlocality.

We further apply the developed theoretical formulation to the TMS output generated by a double-cavity optomechanical system coupled to a common mechanical resonator. Such a hybrid, reversible quantum interface can be experimentally realized by integrating an optical cavity with microwave superconducting circuits [10,50]. In fact, this framework can be applied to a current experiment in optomechanical systems to test Bell nonlocality, where light-matter entanglement is present between the vibrational motion of two silicon optomechanical oscillators [44]. Our analysis shows that the region of Bell nonlocality is significantly smaller than, and entirely contained within, the corresponding region of entanglement. This qualitative behavior persists

Optics EXPRESS

even in the presence of non-identical spectral filtering, although both the entanglement and nonlocality regions are reduced. Notably, maximal entanglement does not necessarily guarantee violation of a Bell inequality, whereas nonlocality may occur for states with a comparatively lower degree of entanglement. Finally, we find that in the presence of mismatched filter frequencies the boundary of nonlocality expands as the filter linewidth increases. This trend contrasts with the case of identical filtering and matched frequencies, where reducing the linewidth enhances the nonlocal region. Moreover, generation of highly entangled TMS in cavity-optomechanical system had always reamin useful [10,45], and the study of Bell nonlocality in optomechanical system has been in high interest [46,47], for its application in quantum communication, limilation/advantage due to correlated measurement constrain, and overall foundational aspect of quantum mechanics.

In summary, this article provides a generalized formulation of the maximized Bell function as a quantification of the non-locality of bipartite Gaussian states. Secondly, our analysis shows that if the bipartite Gaussian state is nonlocally measurable, it is sufficiently proven that the state is entangled. Finally, we show how the new formula of nonlocalality can be applied to a realistic setup, which is the filtered output of a double-cavity optomechanical system.

Funding. European Commission (101065991).

Acknowledgments. The author is grateful to K. Banaszek for his insightful comments while developing the idea and validating the work. The work has partly been supported by the European Commission, MSCA GA no. 101065991 (SingletSQL).

Disclosures. The author has no conflicts to disclose.

Data availability. No data has been generated.

References

1. L. Lami, A. Serafini, and G. Adesso, "Gaussian entanglement revisited," New J. Phys. **20**(2), 023030 (2018).
2. G. Adesso and A. Datta, "Quantum versus classical correlations in gaussian states," Phys. Rev. Lett. **105**(3), 030501 (2010).
3. C. Weedbrook, S. Pirandola, R. García-Patrón, *et al.*, "Gaussian quantum information," Rev. Mod. Phys. **84**(2), 621–669 (2012).
4. C. Weedbrook, "Continuous-variable quantum key distribution with entanglement in the middle," Phys. Rev. A **87**(2), 022308 (2013).
5. M. B. Plenio and S. F. Huelga, "Entangled light from white noise," Phys. Rev. Lett. **88**(19), 197901 (2002).
6. A. V. Andrianov, N. A. Kalinin, A. A. Sorokin, *et al.*, "Fiber-optical sources of quantum squeezed light," Optoelectron.Instrument.Proc. **59**(1), 28–38 (2023).
7. C. Li, S. Ren, Y. Yan, *et al.*, "Distribution of polarization squeezed light through a 20 km fiber channel," Sci. China Inf. Sci. **67**(5), 159501 (2024).
8. J. A. Montoya-Cardona, F. D. Domínguez-Serna, N. C. Rodríguez, *et al.*, "Resonance vs. non-resonance parametric amplification for squeezed light generation in microstructured fibers," *Quantum Sensing, Imaging, and Precision Metrology II*, vol. 12912, J. Scheuer and S. M. Shahriar, eds., International Society for Optics and Photonics (SPIE, 2024), p. 129120C.
9. S. L. Braunstein and H. J. Kimble, "Teleportation of continuous quantum variables," Phys. Rev. Lett. **80**(4), 869–872 (1998).
10. S. Barzanjeh, M. Abdi, G. J. Milburn, *et al.*, "Reversible optical-to-microwave quantum interface," Phys. Rev. Lett. **109**(13), 130503 (2012).
11. K. Jensen, W. Wasilewski, H. Krauter, *et al.*, "Quantum memory for entangled continuous-variable states," Nat. Phys. **7**(1), 13–16 (2011).
12. K. M. Kwan, M. J. Yap, J. Qin, *et al.*, "Amplified squeezed states: analyzing loss and phase noise," Classical Quantum Gravity **41**(21), 215005 (2024).
13. S. Zaiser, T. Rendler, I. Jakobi, *et al.*, "Enhancing quantum sensing sensitivity by a quantum memory," Nat. Commun. **7**(1), 12279 (2016).
14. F. Y. Khalili and E. S. Polzik, "Overcoming the standard quantum limit in gravitational wave detectors using spin systems with a negative effective mass," Phys. Rev. Lett. **121**(3), 031101 (2018).
15. E. Zeuthen, E. S. Polzik, and F. Y. Khalili, "Gravitational wave detection beyond the standard quantum limit using a negative-mass spin system and virtual rigidity," Phys. Rev. D **100**(6), 062004 (2019).
16. S. Agasti, A. Shukla, and M. Nesladek, "Negative radiation pressure scheme for simultaneous suppression of arduous back-action evasion and shot noise in gravitational wave detectors," Classical Quantum Gravity **42**(6), 065021 (2025).
17. A. Einstein, B. Podolsky, and N. Rosen, "Can quantum-mechanical description of physical reality be considered complete?" Phys. Rev. **47**(10), 777–780 (1935).

Optics EXPRESS

18. J. S. Bell, "On the einstein podolsky rosen paradox," Physics (Long Island City, N. Y.) **1**(3), 195–200 (1964).
19. H. Jeong, J. Lee, and M. S. Kim, "Dynamics of nonlocality for a two-mode squeezed state in a thermal environment," Phys. Rev. A **61**(5), 052101 (2000).
20. A. Gilchrist, P. Deuar, and M. D. Reid, "Contradiction of quantum mechanics with local hidden variables for quadrature phase amplitude measurements," Phys. Rev. Lett. **80**(15), 3169–3172 (1998).
21. W. J. Munro, "Optimal states for bell-inequality violations using quadrature-phase homodyne measurements," Phys. Rev. A **59**(6), 4197–4201 (1999).
22. J. F. Clauser, M. A. Horne, A. Shimony, *et al.*, "Proposed experiment to test local hidden-variable theories," Phys. Rev. Lett. **23**(15), 880–884 (1969).
23. J. F. Clauser and M. A. Horne, "Experimental consequences of objective local theories," Phys. Rev. D **10**(2), 526–535 (1974).
24. K. Banaszek and K. Wódkiewicz, "Nonlocality of the einstein-podolsky-rosen state in the wigner representation," Phys. Rev. A **58**(6), 4345–4347 (1998).
25. K. Banaszek and K. Wódkiewicz, "Testing quantum nonlocality in phase space," Phys. Rev. Lett. **82**(10), 2009–2013 (1999).
26. A. Peres, "Separability criterion for density matrices," Phys. Rev. Lett. **77**(8), 1413–1415 (1996).
27. M. Horodecki, P. Horodecki, and R. Horodecki, "Separability of mixed states: necessary and sufficient conditions," Phys. Lett. A **223**(1-2), 1–8 (1996).
28. R. Simon, "Peres-horodecki separability criterion for continuous variable systems," Phys. Rev. Lett. **84**(12), 2726–2729 (2000).
29. L.-M. Duan, G. Giedke, J. I. Cirac, *et al.*, "Inseparability criterion for continuous variable systems," Phys. Rev. Lett. **84**(12), 2722–2725 (2000).
30. S. Agasti, "Entanglement, squeezing and non-locality limits in filtered two-mode squeezed mixed states," Opt. Express **33**(9), 18709–18727 (2025).
31. A. Barasiński, N. Sudak, and J. Peĭina Jr, "Efficient and reliable detection of nonlocal quantum correlations in continuous-variable and hybrid states via random measurements," New J. Phys. **26**(7), 073034 (2024).
32. X. Shao-Hua, S. Bin, and S. Ke-Hui, "Quantum entanglement and nonlocality properties of two-mode gaussian squeezed states," Chin. Phys. B **18**(2), 418–425 (2009).
33. Z.-B. Chen, J.-W. Pan, G. Hou, *et al.*, "Maximal violation of bell's inequalities for continuous variable systems," Phys. Rev. Lett. **88**(4), 040406 (2002).
34. A. Sumairi, S. Hazmin, and C. R. Ooi, "Quantum entanglement criteria," J. Mod. Opt. **60**(7), 589–597 (2013).
35. D. Girolami, "Quantum correlations in information theory," Ph.D. thesis, Nottingham U. (2013).
36. S. Agasti, "Thermalization dynamics of entanglement and non-locality of filtered two-mode squeezed states," Opt. Express **33**(3), 4420–4436 (2025).
37. S. Halder, M. Banik, S. Agrawal, *et al.*, "Strong quantum nonlocality without entanglement," Phys. Rev. Lett. **122**(4), 040403 (2019).
38. F. Buscemi, "All entangled quantum states are nonlocal," Phys. Rev. Lett. **108**(20), 200401 (2012).
39. R. F. Werner, "Quantum states with Einstein-Podolsky-Rosen correlations admitting a hidden-variable model," Phys. Rev. A **40**(8), 4277–4281 (1989).
40. N. Gisin, "Bell's inequality holds for all non-product states," Phys. Lett. A **154**(5-6), 201–202 (1991).
41. L. Masanes, Y.-C. Liang, and A. C. Doherty, "All bipartite entangled states display some hidden nonlocality," Phys. Rev. Lett. **100**(9), 090403 (2008).
42. J. Barrett, "Nonsequential positive-operator-valued measurements on entangled mixed states do not always violate a bell inequality," Phys. Rev. A **65**(4), 042302 (2002).
43. M. Abdi, S. Pirandola, P. Tombesi, *et al.*, "Continuous-variable-entanglement swapping and its local certification: Entangling distant mechanical modes," Phys. Rev. A **89**(2), 022331 (2014).
44. I. Marinković, A. Wallucks, R. Riedinger, *et al.*, "Optomechanical bell test," Phys. Rev. Lett. **121**(22), 220404 (2018).
45. M. J. Woolley and A. A. Clerk, "Two-mode back-action-evading measurements in cavity optomechanics," Phys. Rev. A **87**(6), 063846 (2013).
46. V. C. Vivoli, T. Barnea, C. Galland, *et al.*, "Proposal for an optomechanical bell test," Phys. Rev. Lett. **116**(7), 070405 (2016).
47. S. G. Hofer, K. W. Lehnert, and K. Hammerer, "Proposal to test bell's inequality in electromechanics," Phys. Rev. Lett. **116**(7), 070406 (2016).
48. S. L. Braunstein, "Squeezing as an irreducible resource," Phys. Rev. A **71**(5), 055801 (2005).
49. G. Kimura, A. Mayumi, H. Ohno, *et al.*, "Beyond robertson-schrödinger: A general uncertainty relation unveiling hidden noncommutative trade-offs," (2025).
50. J. D. Teufel, D. Li, M. S. Allman, *et al.*, "Circuit cavity electromechanics in the strong-coupling regime," Nature **471**(7337), 204–208 (2011).
51. S. Agasti, "Simulation of matrix product states for dissipation and thermalization dynamics of open quantum systems," J. Phys. Commun. **4**(1), 015002 (2020).